MS Roald Amundsen - Deck 3

Operator deck number retained. Official ship-page artwork, reviewed 23 October 2026.

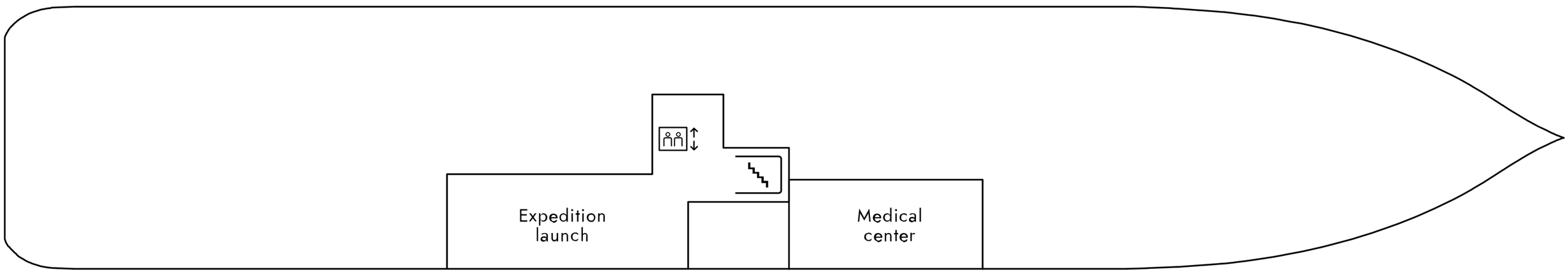

Cruises Frog compilation of HX artwork. Not an operator-issued PDF. Vector geometry rendered; blank outer margins trimmed.

Confirm exact cabin/category, refit configuration, views and accessibility with HX. Source grade codes remain on the diagrams.

https://www.travelhx.com/en/ships/roald-amundsen/

MS Roald Amundsen - Deck 4

Operator deck number retained. Official ship-page artwork, reviewed 23 October 2026.

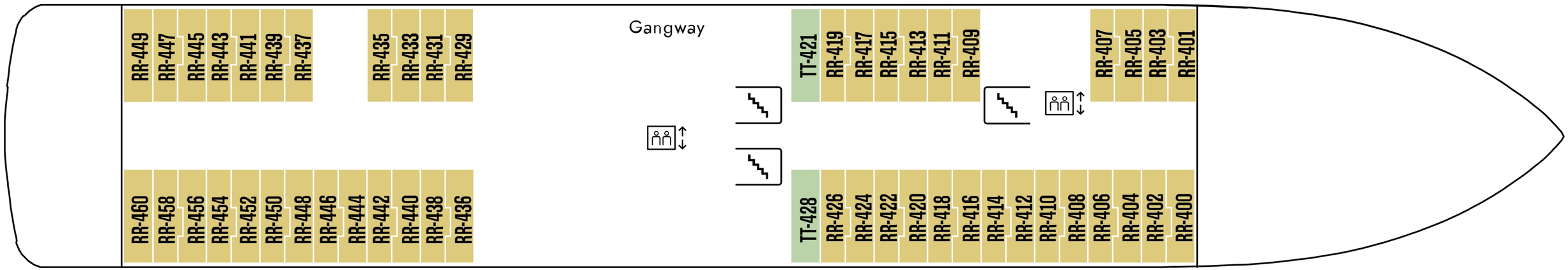

Cruises Frog compilation of HX artwork. Not an operator-issued PDF. Vector geometry rendered; blank outer margins trimmed.

Confirm exact cabin/category, refit configuration, views and accessibility with HX. Source grade codes remain on the diagrams.

https://www.travelhx.com/en/ships/roald-amundsen/

MS Roald Amundsen - Deck 5

Operator deck number retained. Official ship-page artwork, reviewed 23 October 2026.

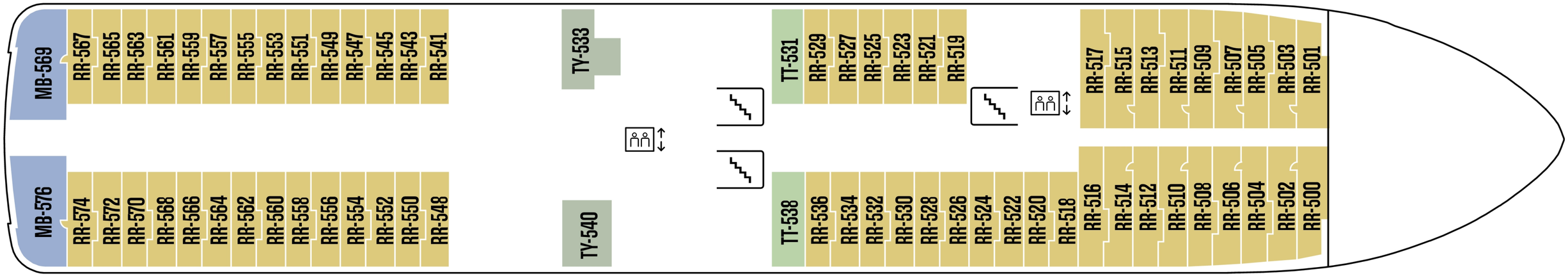

Cruises Frog compilation of HX artwork. Not an operator-issued PDF. Vector geometry rendered; blank outer margins trimmed.

Confirm exact cabin/category, refit configuration, views and accessibility with HX. Source grade codes remain on the diagrams.

https://www.travelhx.com/en/ships/roald-amundsen/

MS Roald Amundsen - Deck 6

Operator deck number retained. Official ship-page artwork, reviewed 23 October 2026.

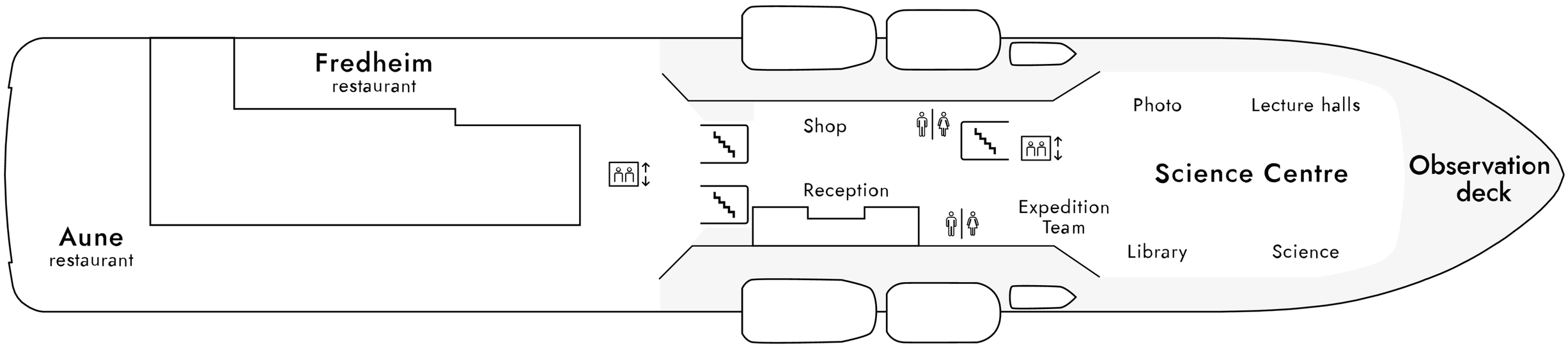

Cruises Frog compilation of HX artwork. Not an operator-issued PDF. Vector geometry rendered; blank outer margins trimmed.

Confirm exact cabin/category, refit configuration, views and accessibility with HX. Source grade codes remain on the diagrams.

https://www.travelhx.com/en/ships/roald-amundsen/

MS Roald Amundsen - Deck 7

Operator deck number retained. Official ship-page artwork, reviewed 23 October 2026.

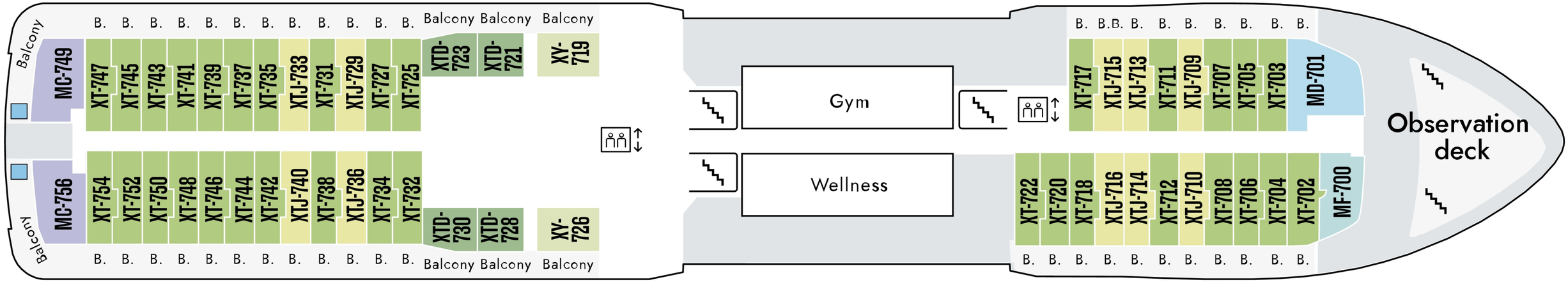

Cruises Frog compilation of HX artwork. Not an operator-issued PDF. Vector geometry rendered; blank outer margins trimmed.

Confirm exact cabin/category, refit configuration, views and accessibility with HX. Source grade codes remain on the diagrams.

https://www.travelhx.com/en/ships/roald-amundsen/

MS Roald Amundsen - Deck 8

Operator deck number retained. Official ship-page artwork, reviewed 23 October 2026.

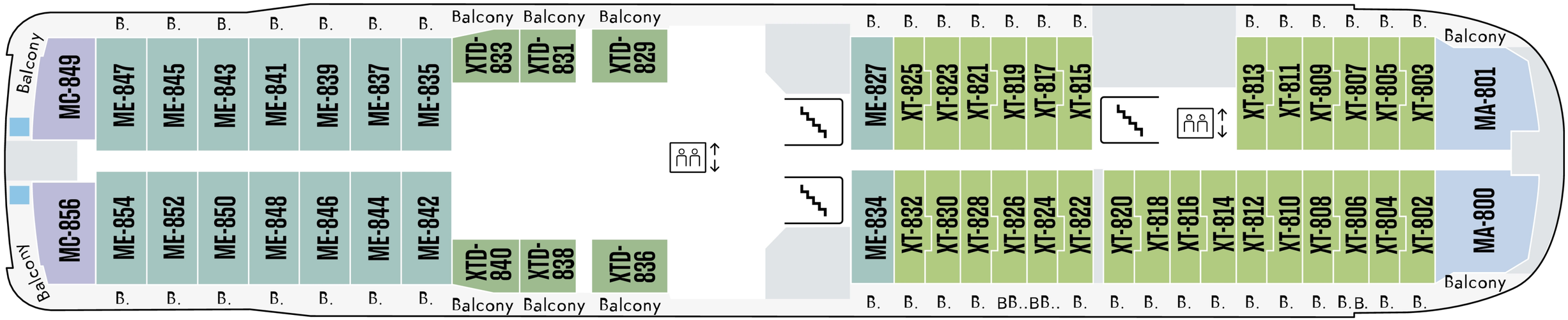

Cruises Frog compilation of HX artwork. Not an operator-issued PDF. Vector geometry rendered; blank outer margins trimmed.

Confirm exact cabin/category, refit configuration, views and accessibility with HX. Source grade codes remain on the diagrams.

https://www.travelhx.com/en/ships/roald-amundsen/

MS Roald Amundsen - Deck 9

Operator deck number retained. Official ship-page artwork, reviewed 23 October 2026.

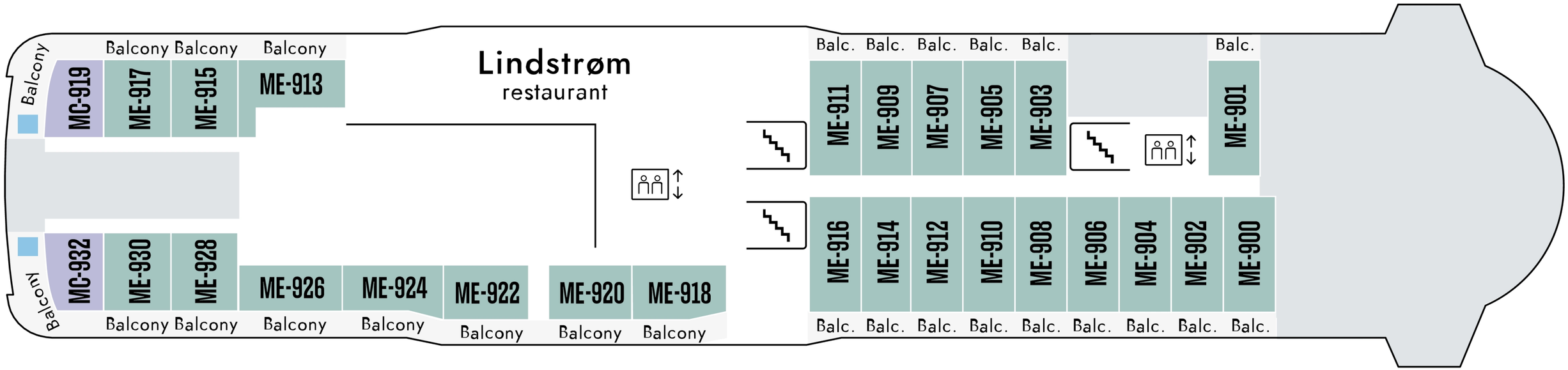

Cruises Frog compilation of HX artwork. Not an operator-issued PDF. Vector geometry rendered; blank outer margins trimmed.

Confirm exact cabin/category, refit configuration, views and accessibility with HX. Source grade codes remain on the diagrams.

https://www.travelhx.com/en/ships/roald-amundsen/

MS Roald Amundsen - Deck 10

Operator deck number retained. Official ship-page artwork, reviewed 23 October 2026.

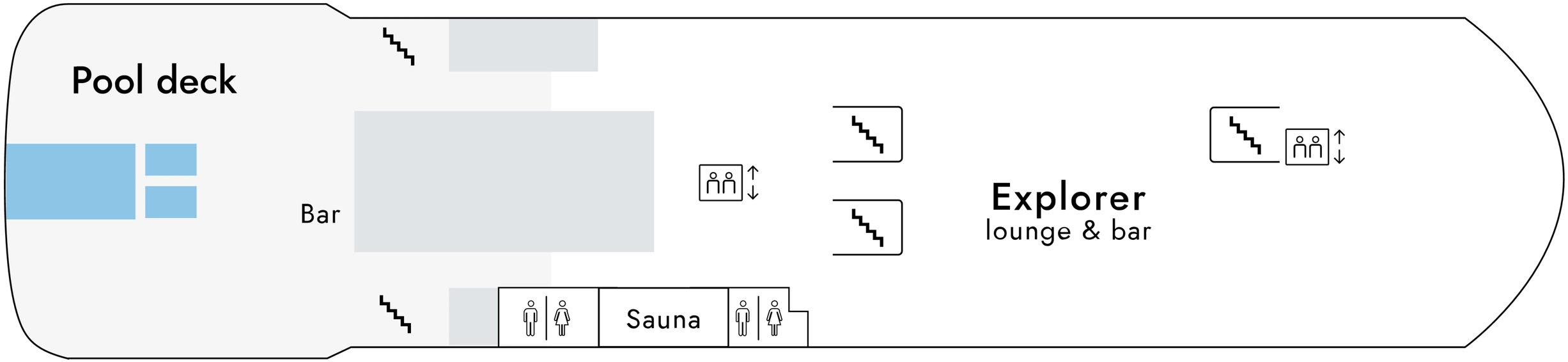

Cruises Frog compilation of HX artwork. Not an operator-issued PDF. Vector geometry rendered; blank outer margins trimmed.

Confirm exact cabin/category, refit configuration, views and accessibility with HX. Source grade codes remain on the diagrams.

https://www.travelhx.com/en/ships/roald-amundsen/

MS Roald Amundsen - Deck 11

Operator deck number retained. Official ship-page artwork, reviewed 23 October 2026.

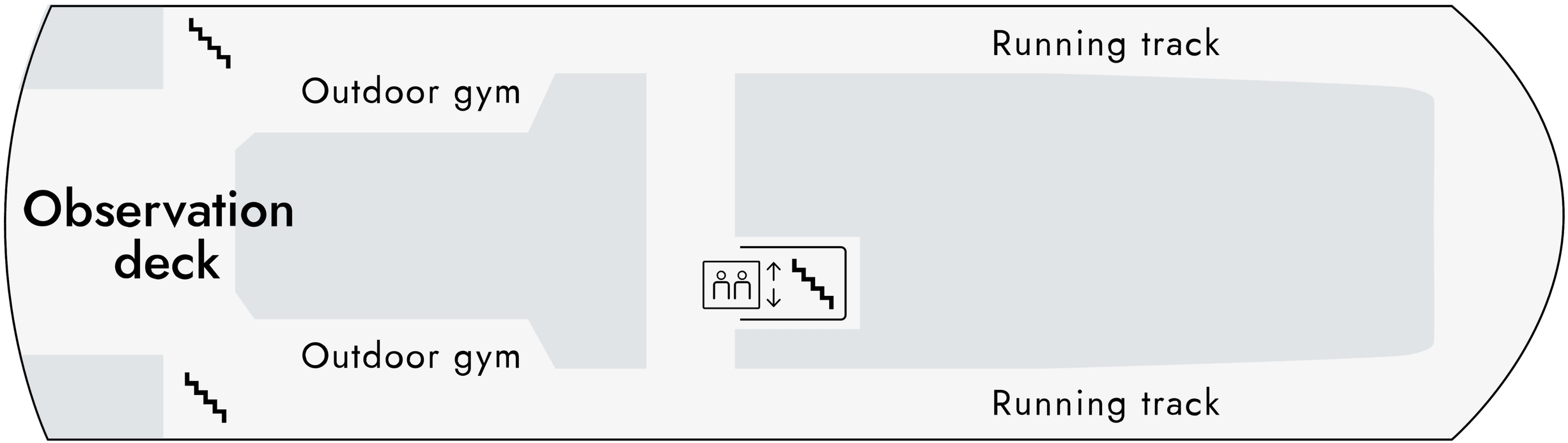

Cruises Frog compilation of HX artwork. Not an operator-issued PDF. Vector geometry rendered; blank outer margins trimmed.

Confirm exact cabin/category, refit configuration, views and accessibility with HX. Source grade codes remain on the diagrams.

https://www.travelhx.com/en/ships/roald-amundsen/